FAUBOURG BLACK PORCELAIN WITH LEVER HANDLES

G2M-5300BE

Trim for THG thermostat 1 volume control, rough part supplied with fixing box ref.5 300AE/US

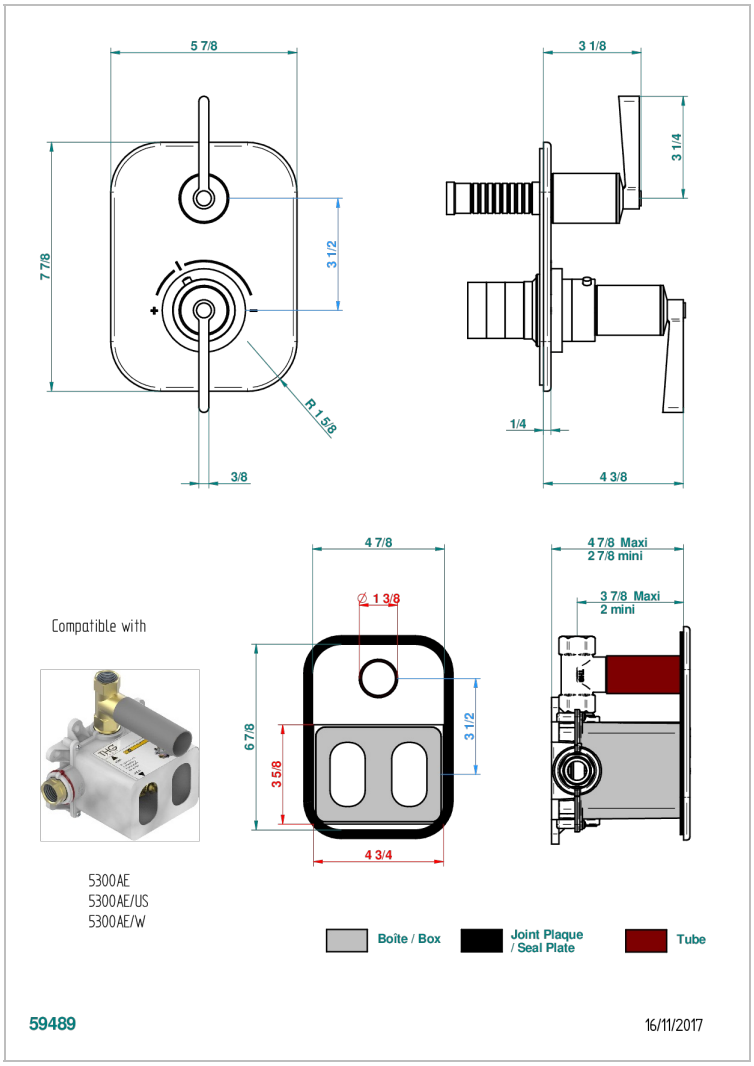

CHARACTERISTIC

- Built-in thermostatic cover for 5300AE - 5300AE/W - 5300AE/US with 1 no. 3/4" output
- Requires concealed thermostat réf 5300AE - 5300AE/W - 5300AE/US
- For shower 1 function
- Temperature control knob with security stop at 38°C
- Solid brass plate and knob
- ASME : ASME A112.18.1-2011/CSA B125.1-11
- DVGW : DW-6512CQ0608

STANDARDS

DVGW

UPC C ®

RELATED SKU'S

- Ref. G00-5300AE/US 3/4" THG thermostat,60 l/mn with wax cartridge, with valve delivered, with a built-in box, no trim
- Ref. G00-5100G Reinforced stop ring for THG thermostatic with fixing set

AVAILABLE FINITIONS

Blush PVD - H62
Brass color PVD - H49
Brown bronze color PVD - F33
Chrome polished - A02
Chrome polished / gold polished - G02
Gold color PVD - H52
Gold mat - F07
Gold polished - F01
Graphite PVD - H64
Matt Umber PVD - H67
Matt blush PVD - H60
Matt brass color PVD - H50
Matt brown bronze color PVD - F34
Matt chrome (American satin) - C02
Matt gold color PVD - H53
Matt graphite PVD - H65
Matt nickel (American satin) - C01
Matt nickel color PVD - H56
Nickel antique / Sovereign - H28
Nickel color PVD - H55
Nickel polished - B01
Soft gold - F30
Soft matt gold - F31
Umber PVD - H66