Berea Dual-control Thermostatic Valve Trim with Volume control and Diverter
11-20-T

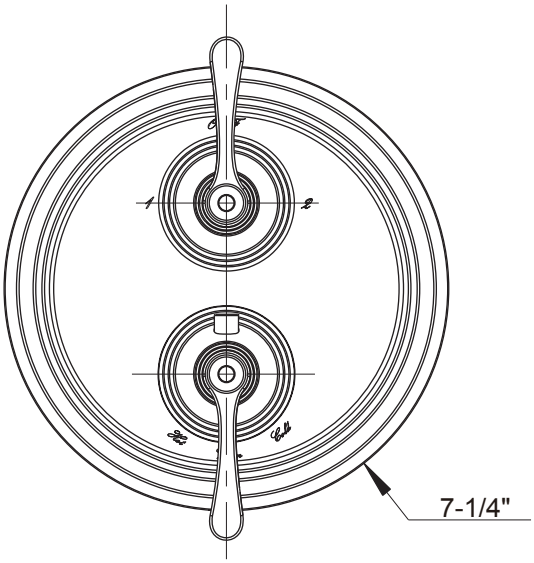

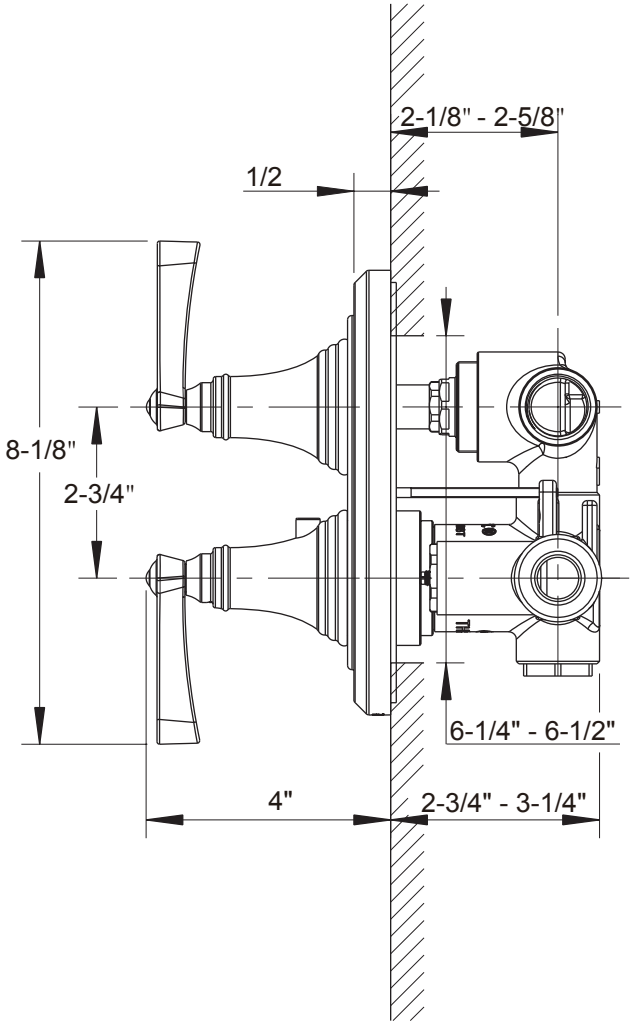

crosswater
LONDON